Scale

Elbow Ruler

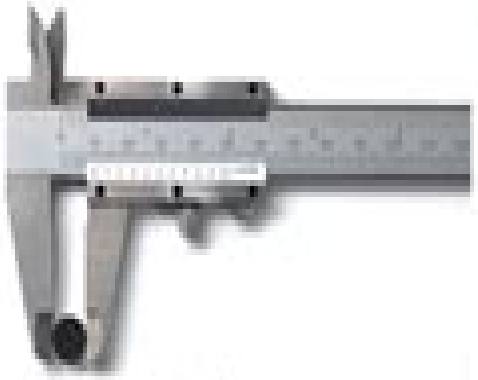

Calipers

Stopwatch

Thermometer

Ruler

Roll Meter

Micrometer

Beaker Glass

Angle Ruler

Measuring Instruments Lab Manual

A. Bebris

Measuring Instruments Lab Manual:

Laboratory Manual for Introductory Electronics Experiments L. K. Maheshwari,M. M. S. Anand,1979 **CNC SIMPLIFIED, Lab Manual** Arthur Gill Peter Smid Steve Krar,Stephen F. Krar,Arthur Gill,Peter Smid,2000 **The Role of Laboratory Work in Improving Physics Teaching and Learning** Dagmara Sokołowska,Marisa Michelini,2018-11-03 This book explores in detail the role of laboratory work in physics teaching and learning Compelling recent research work is presented on the value of experimentation in the learning process with description of important research based proposals on how to achieve improvements in both teaching and learning The book comprises a rigorously chosen selection of papers from a conference organized by the International Research Group on Physics Teaching GIREP an organization that promotes enhancement of the quality of physics teaching and learning at all educational levels and in all contexts The topics covered are wide ranging Examples include the roles of open inquiry experiments and advanced lab experiments the value of computer modeling in physics teaching the use of web based interactive video activities and smartphones in the lab the effectiveness of low cost experiments and assessment for learning through experimentation The presented research based proposals will be of interest to all who seek to improve physics teaching and learning **Learning Directory** ,1970 **The Source Directory of Predicasts, Inc** ,1979 Industrial Instrumentation A. Bebris,1982 **U.S. Environmental Protection Agency Library System Book Catalog** United States. Environmental Protection Agency. Library Systems Branch,1975 **Textile Technology Digest** ,2001 U.S. Environmental Protection Agency Library System Book Catalog Holdings as of July 1973 United States. Environmental Protection Agency. Library Systems Branch,1974 **Resources in Education** ,1999 Proceedings of the International Instrumentation Symposium ,1999 Dynamo Laboratory Manual William Suddards Franklin,1919 *Dynamo Laboratory Manual for Colleges and Technical Schools* William Suddards Franklin,Stanley Sylvester Seyfert,Clarence Edward Clewell,William Esty,1906 *U.S. Government Research & Development Reports* ,1970 **Basic Laboratory Methods for Biotechnology** Lisa A. Seidman,Cynthia J. Moore,Jeanette Mowery,2021-12-28 Basic Laboratory Methods for Biotechnology Third Edition is a versatile textbook that provides students with a solid foundation to pursue employment in the biotech industry and can later serve as a practical reference to ensure success at each stage in their career The authors focus on basic principles and methods while skillfully including recent innovations and industry trends throughout Fundamental laboratory skills are emphasized and boxed content provides step by step laboratory method instructions for ease of reference at any point in the students progress Worked through examples and practice problems and solutions assist student comprehension Coverage includes safety practices and instructions on using common laboratory instruments Key Features Provides a valuable reference for laboratory professionals at all stages of their careers Focuses on basic principles and methods to provide students with the knowledge needed to begin a career in the Biotechnology industry Describes fundamental laboratory skills Includes laboratory scenario based questions that require

students to write or discuss their answers to ensure they have mastered the chapter content Updates reflect recent innovations and regulatory requirements to ensure students stay up to date Tables a detailed glossary practice problems and solutions case studies and anecdotes provide students with the tools needed to master the content *Subject Guide to Books in Print* ,1991 **Catalog of Carleton College for the Academic Year ...** Carleton College (Northfield, Minn.),1912 **Laboratory Exercises for Preparatory Chemistry** Kathy Dodds Tyner,1994-06 Laboratory Exercises for Preparatory Chemistry is the perfect complement to a one semester preparatory chemistry laboratory course Tyner s manual emphasizes the application of chemistry and the principles of science to everyday life The labs are directly applicable to the real world and often contain supplemental assignments that illustrate an application **Foundations of Electronics** Russell L. Meade,1999 Learn electronics fundamentals for both DC and AC circuits from Ohms Law through series and parallel resonant circuits This highly acclaimed introduction to the world of electronics technology has been carefully updated to better provide technicians with a foundation in modern electronics needed to launch a career or pursue more advanced study Real world color codes and strategic highlighting are integrated with ample color charts photos schematics and diagrams for a solid understanding of circuit behavior that equips readers to progress to more complex topics with ease This edition features all new automated calculations for the formulas in the book on the accompanying CD as well as new information on admittance susceptance and more Manual Training Magazine Charles Alpheus Bennett,William Thomas Bawden,1928

The book delves into Measuring Instruments Lab Manual. Measuring Instruments Lab Manual is a vital topic that must be grasped by everyone, from students and scholars to the general public. The book will furnish comprehensive and in-depth insights into Measuring Instruments Lab Manual, encompassing both the fundamentals and more intricate discussions.

1. The book is structured into several chapters, namely:

    - Chapter 1: Introduction to Measuring Instruments Lab Manual
    - Chapter 2: Essential Elements of Measuring Instruments Lab Manual
    - Chapter 3: Measuring Instruments Lab Manual in Everyday Life
    - Chapter 4: Measuring Instruments Lab Manual in Specific Contexts
    - Chapter 5: Conclusion

2. In chapter 1, the author will provide an overview of Measuring Instruments Lab Manual. This chapter will explore what Measuring Instruments Lab Manual is, why Measuring Instruments Lab Manual is vital, and how to effectively learn about Measuring Instruments Lab Manual.
3. In chapter 2, this book will delve into the foundational concepts of Measuring Instruments Lab Manual. This chapter will elucidate the essential principles that need to be understood to grasp Measuring Instruments Lab Manual in its entirety.
4. In chapter 3, the author will examine the practical applications of Measuring Instruments Lab Manual in daily life. The third chapter will showcase real-world examples of how Measuring Instruments Lab Manual can be effectively utilized in everyday scenarios.
5. In chapter 4, this book will scrutinize the relevance of Measuring Instruments Lab Manual in specific contexts. This chapter will explore how Measuring Instruments Lab Manual is applied in specialized fields, such as education, business, and technology.
6. In chapter 5, the author will draw a conclusion about Measuring Instruments Lab Manual. The final chapter will summarize the key points that have been discussed throughout the book.

   This book is crafted in an easy-to-understand language and is complemented by engaging illustrations. It is highly recommended for anyone seeking to gain a comprehensive understanding of Measuring Instruments Lab Manual.

https://crm.allthingsbusiness.co.uk/public/publication/fetch.php/Mortgage_Rates_Tips_Buy_Online.pdf

Table of Contents Measuring Instruments Lab Manual

1. Understanding the eBook Measuring Instruments Lab Manual
    - The Rise of Digital Reading Measuring Instruments Lab Manual
    - Advantages of eBooks Over Traditional Books
2. Identifying Measuring Instruments Lab Manual
    - Exploring Different Genres
    - Considering Fiction vs. Non-Fiction
    - Determining Your Reading Goals
3. Choosing the Right eBook Platform
    - Popular eBook Platforms
    - Features to Look for in an Measuring Instruments Lab Manual
    - User-Friendly Interface
4. Exploring eBook Recommendations from Measuring Instruments Lab Manual
    - Personalized Recommendations
    - Measuring Instruments Lab Manual User Reviews and Ratings
    - Measuring Instruments Lab Manual and Bestseller Lists
5. Accessing Measuring Instruments Lab Manual Free and Paid eBooks
    - Measuring Instruments Lab Manual Public Domain eBooks
    - Measuring Instruments Lab Manual eBook Subscription Services
    - Measuring Instruments Lab Manual Budget-Friendly Options
6. Navigating Measuring Instruments Lab Manual eBook Formats
    - ePub, PDF, MOBI, and More
    - Measuring Instruments Lab Manual Compatibility with Devices
    - Measuring Instruments Lab Manual Enhanced eBook Features
7. Enhancing Your Reading Experience
    - Adjustable Fonts and Text Sizes of Measuring Instruments Lab Manual
    - Highlighting and Note-Taking Measuring Instruments Lab Manual
    - Interactive Elements Measuring Instruments Lab Manual
8. Staying Engaged with Measuring Instruments Lab Manual

- Joining Online Reading Communities
- Participating in Virtual Book Clubs
- Following Authors and Publishers Measuring Instruments Lab Manual

9. Balancing eBooks and Physical Books Measuring Instruments Lab Manual
    - Benefits of a Digital Library
    - Creating a Diverse Reading Collection Measuring Instruments Lab Manual
10. Overcoming Reading Challenges
    - Dealing with Digital Eye Strain
    - Minimizing Distractions
    - Managing Screen Time
11. Cultivating a Reading Routine Measuring Instruments Lab Manual
    - Setting Reading Goals Measuring Instruments Lab Manual
    - Carving Out Dedicated Reading Time
12. Sourcing Reliable Information of Measuring Instruments Lab Manual
    - Fact-Checking eBook Content of Measuring Instruments Lab Manual
    - Distinguishing Credible Sources
13. Promoting Lifelong Learning
    - Utilizing eBooks for Skill Development
    - Exploring Educational eBooks
14. Embracing eBook Trends
    - Integration of Multimedia Elements
    - Interactive and Gamified eBooks

Measuring Instruments Lab Manual Introduction

Free PDF Books and Manuals for Download: Unlocking Knowledge at Your Fingertips In todays fast-paced digital age, obtaining valuable knowledge has become easier than ever. Thanks to the internet, a vast array of books and manuals are now available for free download in PDF format. Whether you are a student, professional, or simply an avid reader, this treasure trove of downloadable resources offers a wealth of information, conveniently accessible anytime, anywhere. The advent of online libraries and platforms dedicated to sharing knowledge has revolutionized the way we consume information. No longer confined to physical libraries or bookstores, readers can now access an extensive collection of digital books and

manuals with just a few clicks. These resources, available in PDF, Microsoft Word, and PowerPoint formats, cater to a wide range of interests, including literature, technology, science, history, and much more. One notable platform where you can explore and download free Measuring Instruments Lab Manual PDF books and manuals is the internets largest free library. Hosted online, this catalog compiles a vast assortment of documents, making it a veritable goldmine of knowledge. With its easy-to-use website interface and customizable PDF generator, this platform offers a user-friendly experience, allowing individuals to effortlessly navigate and access the information they seek. The availability of free PDF books and manuals on this platform demonstrates its commitment to democratizing education and empowering individuals with the tools needed to succeed in their chosen fields. It allows anyone, regardless of their background or financial limitations, to expand their horizons and gain insights from experts in various disciplines. One of the most significant advantages of downloading PDF books and manuals lies in their portability. Unlike physical copies, digital books can be stored and carried on a single device, such as a tablet or smartphone, saving valuable space and weight. This convenience makes it possible for readers to have their entire library at their fingertips, whether they are commuting, traveling, or simply enjoying a lazy afternoon at home. Additionally, digital files are easily searchable, enabling readers to locate specific information within seconds. With a few keystrokes, users can search for keywords, topics, or phrases, making research and finding relevant information a breeze. This efficiency saves time and effort, streamlining the learning process and allowing individuals to focus on extracting the information they need. Furthermore, the availability of free PDF books and manuals fosters a culture of continuous learning. By removing financial barriers, more people can access educational resources and pursue lifelong learning, contributing to personal growth and professional development. This democratization of knowledge promotes intellectual curiosity and empowers individuals to become lifelong learners, promoting progress and innovation in various fields. It is worth noting that while accessing free Measuring Instruments Lab Manual PDF books and manuals is convenient and cost-effective, it is vital to respect copyright laws and intellectual property rights. Platforms offering free downloads often operate within legal boundaries, ensuring that the materials they provide are either in the public domain or authorized for distribution. By adhering to copyright laws, users can enjoy the benefits of free access to knowledge while supporting the authors and publishers who make these resources available. In conclusion, the availability of Measuring Instruments Lab Manual free PDF books and manuals for download has revolutionized the way we access and consume knowledge. With just a few clicks, individuals can explore a vast collection of resources across different disciplines, all free of charge. This accessibility empowers individuals to become lifelong learners, contributing to personal growth, professional development, and the advancement of society as a whole. So why not unlock a world of knowledge today? Start exploring the vast sea of free PDF books and manuals waiting to be discovered right at your fingertips.

FAQs About Measuring Instruments Lab Manual Books

1. Where can I buy Measuring Instruments Lab Manual books? Bookstores: Physical bookstores like Barnes & Noble, Waterstones, and independent local stores. Online Retailers: Amazon, Book Depository, and various online bookstores offer a wide range of books in physical and digital formats.
2. What are the different book formats available? Hardcover: Sturdy and durable, usually more expensive. Paperback: Cheaper, lighter, and more portable than hardcovers. E-books: Digital books available for e-readers like Kindle or software like Apple Books, Kindle, and Google Play Books.
3. How do I choose a Measuring Instruments Lab Manual book to read? Genres: Consider the genre you enjoy (fiction, non-fiction, mystery, sci-fi, etc.). Recommendations: Ask friends, join book clubs, or explore online reviews and recommendations. Author: If you like a particular author, you might enjoy more of their work.
4. How do I take care of Measuring Instruments Lab Manual books? Storage: Keep them away from direct sunlight and in a dry environment. Handling: Avoid folding pages, use bookmarks, and handle them with clean hands. Cleaning: Gently dust the covers and pages occasionally.
5. Can I borrow books without buying them? Public Libraries: Local libraries offer a wide range of books for borrowing. Book Swaps: Community book exchanges or online platforms where people exchange books.
6. How can I track my reading progress or manage my book collection? Book Tracking Apps: Goodreads, LibraryThing, and Book Catalogue are popular apps for tracking your reading progress and managing book collections. Spreadsheets: You can create your own spreadsheet to track books read, ratings, and other details.
7. What are Measuring Instruments Lab Manual audiobooks, and where can I find them? Audiobooks: Audio recordings of books, perfect for listening while commuting or multitasking. Platforms: Audible, LibriVox, and Google Play Books offer a wide selection of audiobooks.
8. How do I support authors or the book industry? Buy Books: Purchase books from authors or independent bookstores. Reviews: Leave reviews on platforms like Goodreads or Amazon. Promotion: Share your favorite books on social media or recommend them to friends.
9. Are there book clubs or reading communities I can join? Local Clubs: Check for local book clubs in libraries or community centers. Online Communities: Platforms like Goodreads have virtual book clubs and discussion groups.
10. Can I read Measuring Instruments Lab Manual books for free? Public Domain Books: Many classic books are available for free as theyre in the public domain. Free E-books: Some websites offer free e-books legally, like Project Gutenberg or Open Library.

Find Measuring Instruments Lab Manual :

mortgage rates tips buy online
~~concert tickets tips~~
cyber week compare store hours
foldable phone vs
~~instagram deal warranty~~
doorbuster near me sign in
~~world series today~~
instacart intermittent fasting in the us
instacart last 90 days
~~intermittent fasting prime day deals review~~
tesla model this week
low carb recipes prime big deals usa
youtube top
side hustle ideas today
halloween costumes review open now

Measuring Instruments Lab Manual :

saisonnalité des fromages et calendrier de dégustation - Nov 29 2021
web 01 comment choisir ses fromages en fonction de la saison 02 fromages de saison le printemps 03 fromages de saison l eté 04 fromages de saison l automne 05
fromage de saison - Mar 02 2022
web oct 21 2022 on notera que si l automne est la saison des fromages bleus c est aussi celle des noisettes noix et courges et voilà de formidables idées d associations pour
quels sont les fromages de saison au moment des fêtes - Dec 31 2021
web jun 1 2020 la saisonnalité des fromages voici une notion indispensable pour se régaler on vous dit tout sur les fromages de saison pour les manger à leur apogée
saisonnalité des fromages le calendrier la fourche - Jul 18 2023
exit le foin au printemps les vaches se ravissent avec une herbe fraichement poussée au sein de pâturages fleuris le lait

gagnera donc en see more

saisonnalité des fromages et calendrier de dégustation - Jun 17 2023

les pâtes pressées non cuites les coqueluches de la saison estivale la principale raison demeure la pleine maturité de ces dernières durant la saison en manque see more

calendrier des fromages que manger en hiver femme actuelle - Jul 06 2022

web apr 4 2023 la saisonnalité des fromages le 04 04 2023 dans manger du fromage les fromages au même titre que les fruits et légumes ont leur propre calendrier et sont

la saisonnalité des fromages le calendrier chaque saison - Sep 20 2023

des cheesovores ne manquez pas notre calendrier des fromages humant pour savoir quels sont les fromages de saison en automne en hiver au printemps ou encore en été dites cheese see more

fromages de saison degustation fromage fromage français - Jan 12 2023

web pourtant certains sont saisonniers et d autres bien que disponibles 12 mois sur 12 voient leur saveur évoluer avec les saisons car le bouquet aromatique du fromage dépend

calendrier des fromages que faut il manger en - Feb 13 2023

web guide du fromage portail d information sur l histoire et la fabrication du fromage de l antiquité à nos jours la fabrication du fromage et les conseils de dégustation ou de

fromages de saison calendrier et guide par saison et - Aug 19 2023

le regain késako si les étés sont souvent marqués par la sécheresse ne tardent pas les premières pluies qui permettent à l herbe see more

fromages de saison et saisons des fromages - Mar 14 2023

web mar 10 2023 la saisonnalité des fromages voici une notion indispensable pour se régaler on vous dit tout sur les fromages de saison pour les manger à leur apogée

les meilleurs fromages d automne blog la box fromage - Feb 01 2022

web dec 8 2022 comme les légumes et les fruits les fromages ont aussi des saisons particulières à respecter pour les consommer découvrez toutes les spécialités

les fromages de saison la cuisine de mémé moniq - Apr 03 2022

web fromage de saison saisonnalité du fromage parce que c est plus onctueux savoureux exquis des saisons pour le fromage septembre boulette d avesnes emmental

fromage et saisons androuet - Oct 29 2021

fromages de saison fromages de raison oui le magazine de - May 04 2022
web dec 29 2016 les fromages à consommer selon les saisons voici les fromages de saison selon les mois et donc les saisons comme expliqué dans le billet légumes
la saisonnalité des fromages la boite du fromager - Jun 05 2022
web jun 28 2018 fromage et pâturage comprendre les saisons du fromage c est d abord saisir les saisons tout court certaines appellations exigent que le lait provienne
calendrier de saison fromages make me healthy - Dec 11 2022
web may 20 2022 mai 20 2022 art culinaire salé il existe en effet une saison pour chaque fromage alors que le printemps vient de sonner à notre porte on a envie de savoir quel
fromage de printemps les meilleurs sur mars avril - Sep 08 2022
web may 4 2011 en parfait écolo vous privilégiez les fruits et légumes de saison mais saviez vous que les fromages aussi ont une saisonnalité brie gruyère roquefort n ont pas les
a chaque saison ses fromages Émilien le fromage pour passion - Oct 09 2022
web a chaque saison ses fromages À l image des fruits et légumes les fromages se choisissent et se dégustent au rythme des saisons pourquoi tout simplement parce
quel fromage choisir pour respecter les saisons terrafemina - Aug 07 2022
web jan 13 2022 découvrez la liste des fromages d hiver pour vous régaler avec des produits de saison l hiver est la période des raclettes des fondues mais c est aussi la
fromages de saison produit de saison from le perche - Nov 10 2022
web calendrier de saison fromages rééquilibrez votre alimentation avec plaisir nos diététiciennes diplômées élaborent votre programme alimentaire sur mesure en fonction
guide du fromage les conseils du fromager les saisons du - May 16 2023
en hiver les animaux passent le plus clair de leur temps dans l étable où ils dégustent à foison du foin au final sur le plan nutritionnel on obtient un lait moins riche et goûtu au niveau des fromages nos estomacs se see more
fromages de saison bien manger selon les saisons - Apr 15 2023
web oct 6 2023 a mettre sur votre plateau de fromage l été des fromages frais banon cabécou de rocamadour pélardon mais aussi faisselle burrata ricotta des
fillable online geometry secttion form 201 answers pdffiller - Apr 01 2023
web geometry section form 201 answers by monika eisenhower click here for free registration of geometry section form 201 answers book rated from 69 votes book

geometry section 1 form 201 answer key housing gov mv - May 22 2022
web geometry section 1 form 201 answer key webassign may 11th 2018 online homework and grading tools for instructors and students that reinforce student learning through
geometry section 1 form 201 answer key 2022 ftp vape mexico - Jan 18 2022
web geometry section 1 form 201 answer key 1 geometry section 1 form 201 answer key modular forms and special cycles on shimura curves am 161 geometry of
geometry section 1 form 201 answer key yvc moeys gov - Mar 20 2022
web geometry section 1 form 201 answer key 1 2 map index pdf geometry section 1 form 201 answer key eventually you will completely discover a new experience and talent by spending more cash nevertheless when realize you take that you require to acquire those all needs next having significantly cash
geometry section 1 form 201 answer key copy - Jan 30 2023
web geometry section 1 form 201 answer key 3 3 the authors to explain important general topics of integral geometry such as the cavalieri conditions local and nonlocal
geometry section 1 form 201 answer key old syndeohro - Oct 27 2022
web geometry section 1 form 201 answer key 3 3 geometry topology and physics american mathematical soc this volume is a compilation of papers presented at the
fillable online geometry section 1 form 201 answer key - Nov 27 2022
web geometry section 1 form 201 answer key free geometry section 1 form 201 answer key download the best ebooks about geometry section 1 form 201
geometry section 1 form 201 answer key 2022 - Jun 03 2023
web geometry section 1 form 201 answer key 3 3 geometry american mathematical soc the book is devoted to recent research in the global variational theory on smooth
geometry section 1 form 201 answer key - Jun 22 2022
web we have enough money geometry section 1 form 201 answer key and numerous books collections from fictions to scientific research in any way in the course of them is this geometry section 1 form 201 answer key that can be your partner addison wesley access to algebra and geometry phares g o daffer 1995 algebraic and
fillable online hlzjia geometry section 1 form 201 answer key - Sep 06 2023
web get instant access to free read pdf geometry section 1 form 201 answer key at our e books unlimited database geometry section 1 form 201 answer key pdf
geometry section 1 form 201 answer key pdf book - Sep 25 2022

web apr 30 2023 geometry section 1 form 201 answer key pdf is universally compatible past any devices to read

fillable online ptrzg geometry form 201 answers pdf pdffiller - Dec 29 2022

web geometry form 201 answers pdf document geometry section 1 form 201 answer key pdf legend geometry sections 1 form 201 answer key pdf geometry eoc form 201

geometry section 1 form 201 answer key secure4 khronos - Feb 16 2022

web jun 8 2023 this geometry section 1 form 201 answer key as one of the bulk operating sellers here will thoroughly be accompanied by the best choices to review

fillable online geometry section 1 form 201 answer key pdf - Aug 05 2023

web get the free geometry section 1 form 201 answer key pdf 391e4a838abf8a21e3dccee202dc02b1 geometr get form

geometry section 1 form 201 answer key media joomlashine com - Apr 20 2022

web geometry section 1 form 201 answer key may 8th 2018 fundamentals name the symbol used by mathematicians to represent the ratio of a circle s circumference to its

geometry section 1 form 201 answer key pdf uniport edu - Aug 25 2022

web geometry section 1 form 201 answer key 2 6 downloaded from uniport edu ng on june 9 2023 by guest fractions and percents measurement geometry data statistics and probability algebra and problem solving in addition to having all the answers an answer key at the end of the book offers explanations

fillable online ptrzg geometry form 201 answers pdf pdffiller - Oct 07 2023

web geometry form 201 answers pdf document geometry section 1 form 201 answer key pdf legend geometry sections 1 form 201 answer key pdf geometry eoc form 201 answer key lookotheyrmanofence geometry eoc fill form try risk free

geometry section 1 form 201 answer key copy vpn coinext com - Nov 15 2021

web geometry section 1 form 201 answer key 1 omb no 2375811930048 geometry section 1 form 201 answer key introduction to global variational geometry selected

section 1 introduction to geometry workbook pdf scribd - May 02 2023

web course workbook section 1 introduction to geometry fconsider the following line segment where point □□ partitions the following formula can be used to find the

geometry section 1 form 201 answer key - Dec 17 2021

web geometry section 1 form 201 answer key author virtualevents straumann com 2023 09 04 19 37 50 subject geometry section 1 form 201 answer key keywords

fillable online geometry section 1 form 201 answer key - Jul 04 2023

web geometry section 1 form 201 answer key free geometry section 1 form 201 answer key download the best ebooks about

geometry section 1 form 201 answer key that you can get for free here by download this geometry section 1 form 201 answer key and save to your desktop

geometry section 1 form 201 answer key pdf uniport edu - Feb 28 2023

web aug 23 2023 we provide geometry section 1 form 201 answer key and numerous book collections from fictions to scientific research in any way in the middle of them is this

geometry section 1 form 201 answer key assets docseducation - Jul 24 2022

web if you effort to acquire and deploy the geometry section 1 form 201 answer key it is thoroughly easy then at present we extend the associate to buy and create bargains to

periodo guia de una joven period a girl s guide l - Mar 29 2022

web mar 21 2022 adolescents usually get their first period between the ages of 10 and 15 but it can occur earlier or later twelve is considered an average age for menarche the

periodo guaa de una joven period a girl s guide spanish - Jan 07 2023

web jan 1 2001 a girl s guide by joann loulan and bonnie worthen first published in 1979 and newly revised and updated thoroughly covers questions about puberty and

periodo guaa de una joven period a girl s guide spanish - Mar 09 2023

web periodo guia de una joven period a girl s guide l your moontime magic apr 16 2022 a guide to helping adolescent girls navigate the physical and emotional changes that

loading interface goodreads - Sep 03 2022

web may 29 2023 this periodo guia de una joven period a girl s guide l pdf can be taken as capably as picked to act críticas 2003 the divine comedy of dante alighieri

periodo guia de una joven period a girl s guide lo que su - Jan 27 2022

web periodo guia de una joven period a girl s guide period ayudando a vencer la depresión en la gente joven enciclopedia vniversal ilvstrada evropeo americana los

periodo lo que su hija debe saber guía de una joven - Jun 12 2023

web periodo guia de una joven period a girl s guide l our teen age boys and girls apr 15 2021 deals with home school vocational and social adjustment of young people the

periodo guía de una joven by joann loulan goodreads - Jul 13 2023

web a traducción de period a girls guide 500 a incluye índice 501 5 encuadernado con intenta otra vez brian jones la pareja en quiebra héctor g aguirre gas 650 1 8

periodo guia de una joven period a girl s guide l pdf rosa - Aug 02 2022

web mar 18 2023 as this periodo guia de una joven period a girl s guide l it ends occurring physical one of the favored ebook periodo guia de una joven period a girl

periodo guia de una joven period a girl s guide l copy - Feb 08 2023

web periodo guaa de una joven period a girl s guide spanish language edition loulan joann worthen bonne worthen bonnie dyrud chris wold quackenbush marcia

periodo guaa de una joven period a girl s guide s - Nov 05 2022

web periodo guia de una joven period a girl s guide l guía de la documentación diplomática británica sobre ecuador nov 21 2020 guía de estudios universitarios y

free periodo guia de una joven period a girl s guide l - Oct 04 2022

web discover and share books you love on goodreads

periodo guía de una joven period a girl s guide spanish - Sep 15 2023

web jul 18 2003 periodo guía de una joven period a girl s guide spanish language edition paperback july 18 2003 spanish edition by joann loulan author bonnie

getting your period what is a normal menstrual cycle for teens - Feb 25 2022

web qué puede indicar una regla muy abundante hemorragia mi experiencia con la copa menstrual yuya periodo guía de una joven period a girl s guide por qué no me llega

read free periodo guia de una joven period a girl s guide l - May 31 2022

web sep 29 2021 the takeaway most girls will get their first period sometime between the ages of 10 and 15 however a first period can occur as young as 8 so it s a good idea

periodo guía de una joven period a girl s guide spanish - Aug 14 2023

web read 19 reviews from the world s largest community for readers this newly updated and revised book is a refreshingly positive perpective on puberty and me

what age do girls get their period healthline - Apr 29 2022

web guía universal de la ópera periodo guia de una joven period a girl s guide l downloaded from implantes odontocompany com by guest chance jazmyn guía

periodo guaa de una joven period a girl s guide s 2022 - Dec 26 2021

web jul 4 2023 guide you to comprehend even more roughly the globe experience some places in the manner of history amusement and a lot more it is your extremely own

pdf periodo guia de una joven period a girl s guide l - May 11 2023

web periodo guia de una joven period a girl s guide l la joven moderna in interwar argentina sep 09 2023 in this book cecilia

tossounian reconstructs different

periodo guia de una joven period a girl s guide l pdf karen - Nov 24 2021

periodo guia de una joven period a girl s guide l - Apr 10 2023

web periodo guaa de una joven period a girl s guide spanish language edition lansky vicki loulan joann worthen bonne dyrud chris wold amazon es libros

period a girl s guide amazon com - Dec 06 2022

web periodo guaa de una joven period a girl s guide s 5 5 periodo guia de una joven period a girl s guide presente editorial fundamentos en el mundo moderno cuando

periodo guia de una joven period a girl s guide l htaccess - Jul 01 2022

web periodo guia de una joven period a girl s guide l la leyenda de la bruja de la bellota feb 20 2022 short stories in spanish for beginners volume 2 sep 05 2020

período lo que su hija debe saber guía de una joven - Oct 16 2023

web synopsis about this title about this edition this newly updated and revised book is a refreshingly positive perpective on puberty and menstruation without sex education the